ST10
ST14

MULTISYSTEM

rev. 1

1 - 9500-.../B-ST10

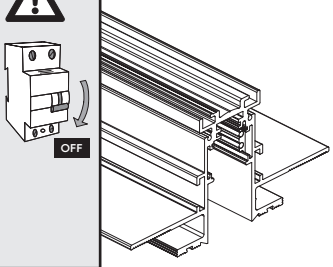

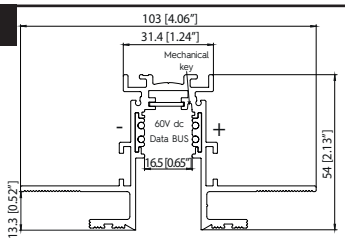

CODE	L mm [ft]
9500-1/B-ST10	1000 [3.28']
9500-2/B-ST10	2000 [6.56']
9500-3/B-ST10	3000 [9.84']

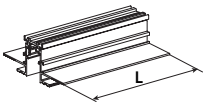

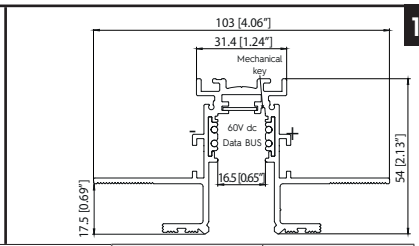

CODE	L mm [ft]
9500-UL4/B-ST14	1219 [4']
9500-UL8/B-ST14	2438 [8']
9500-UL12/B-ST14	3658 [12"]

1 - 9500-UL.../B-ST14

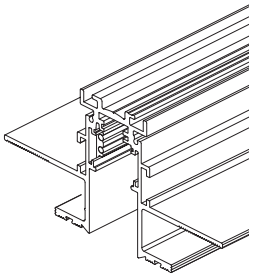

2 - USE

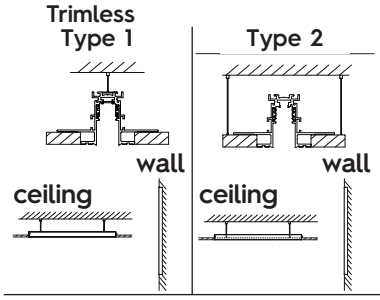

3 - TRIMLESS FIXING (type 1)

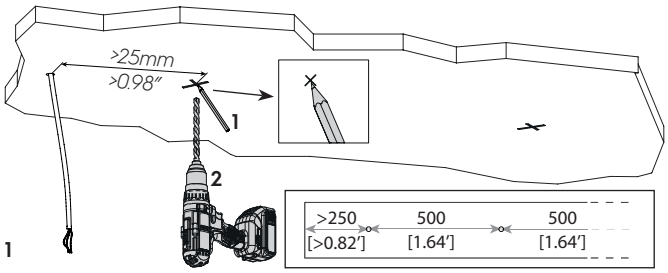

1

MAX LOAD

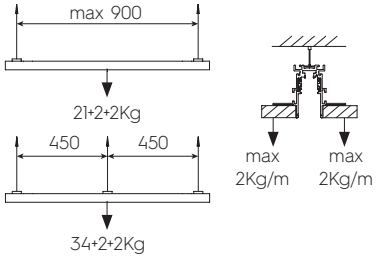

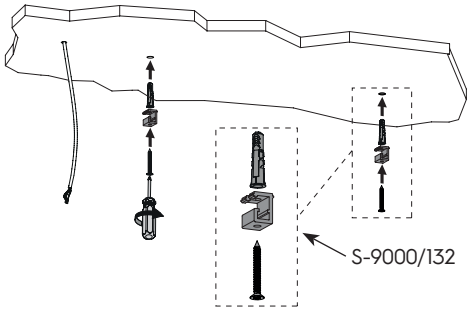

2

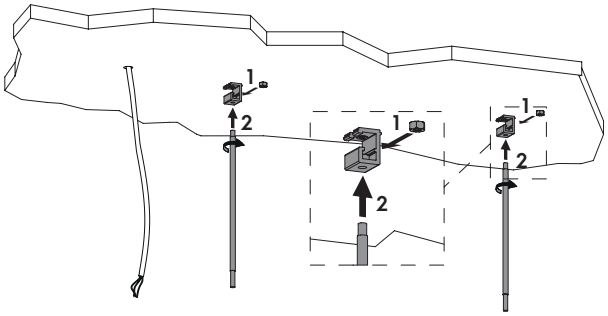

3

3a with S-9000/118...

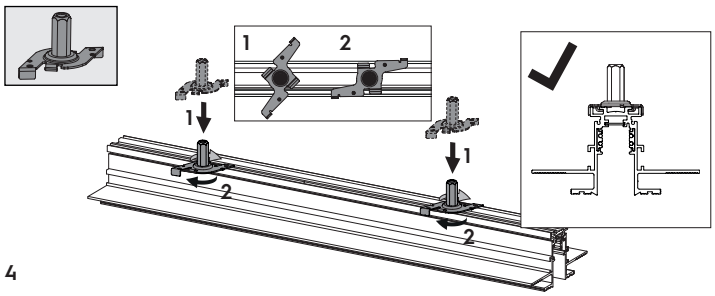

4

3b with S-9000-P2/117

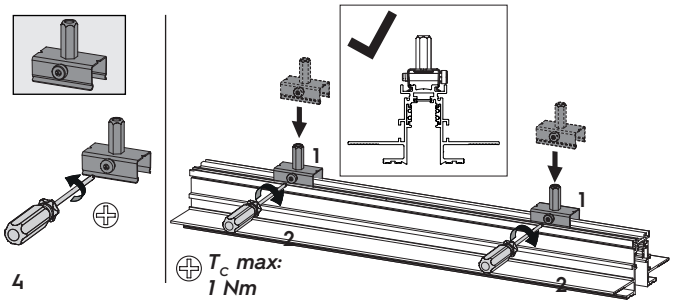

4

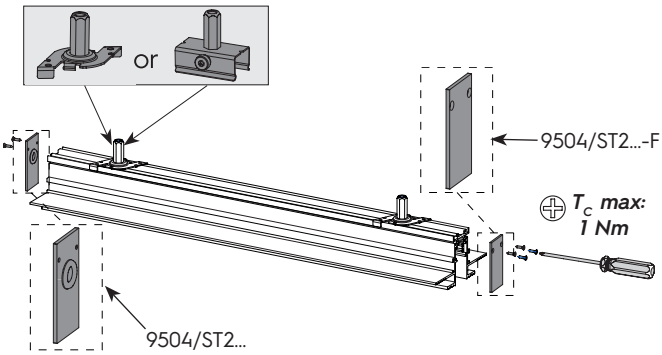

5

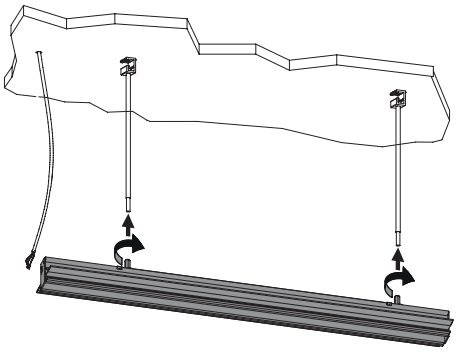

6

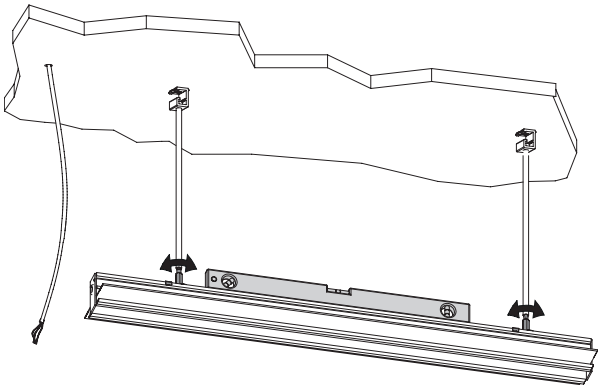

7

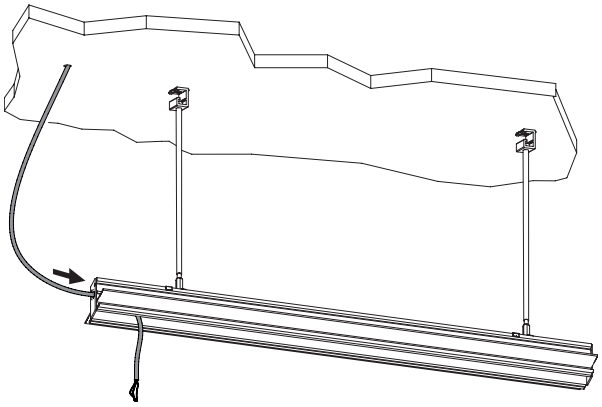

8

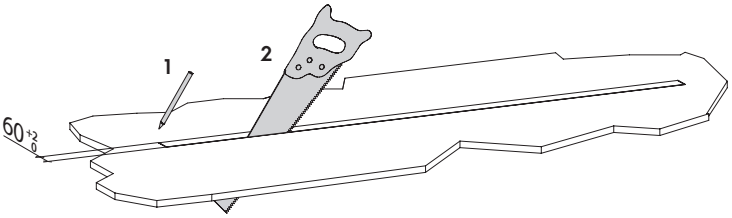

9

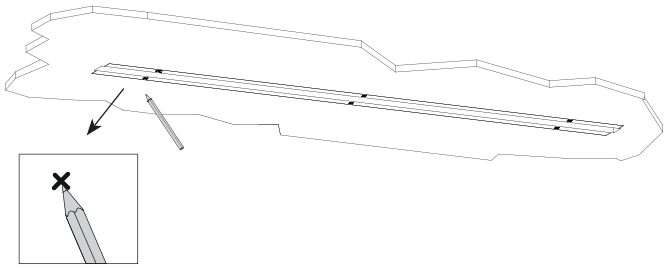

10

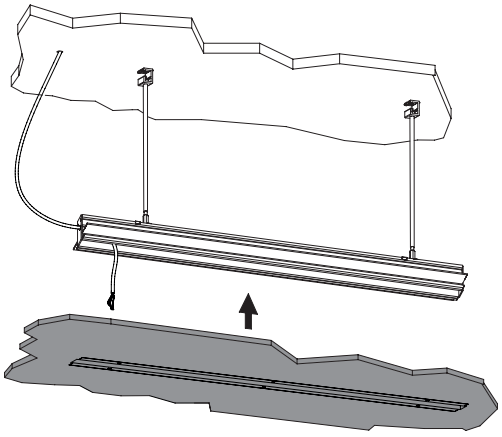

11

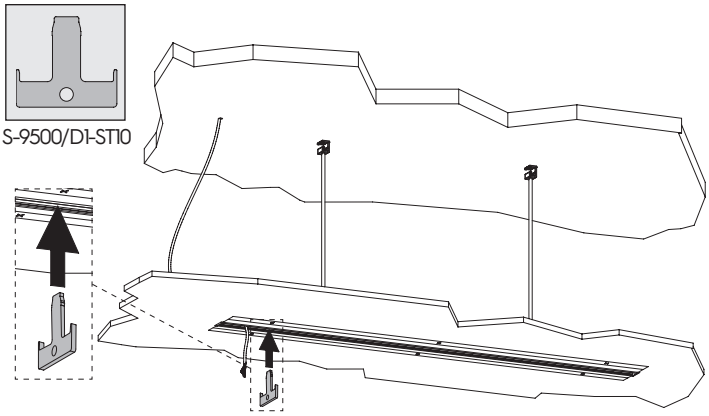

12

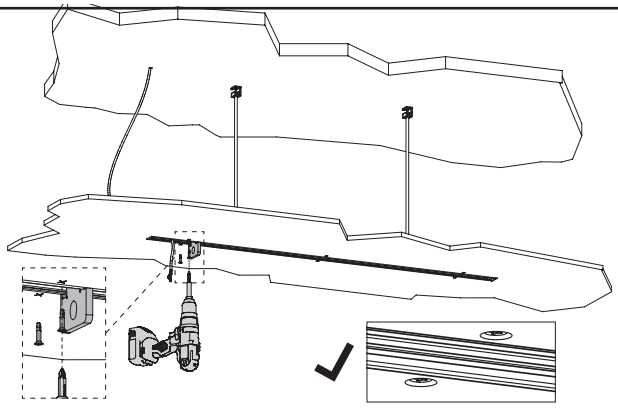

13

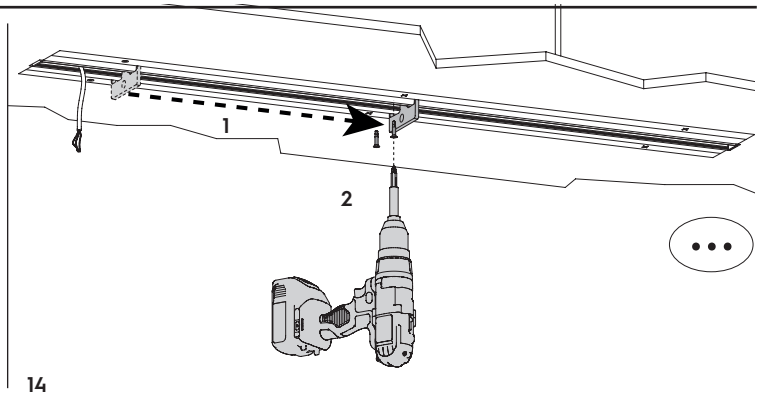

14

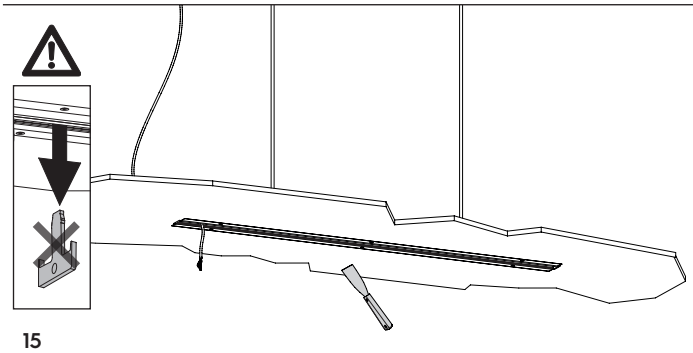

15

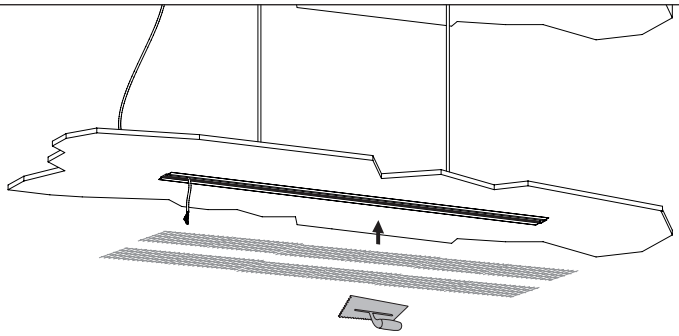

16

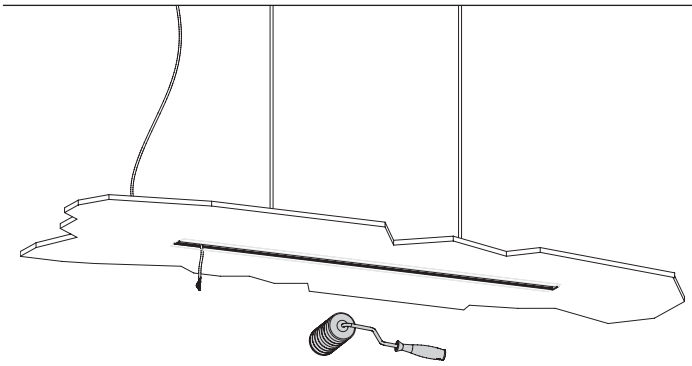

17

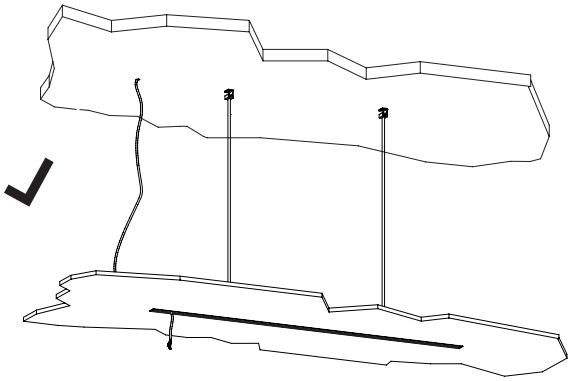

18

4 - TRIMLESS FIXING (type 2)

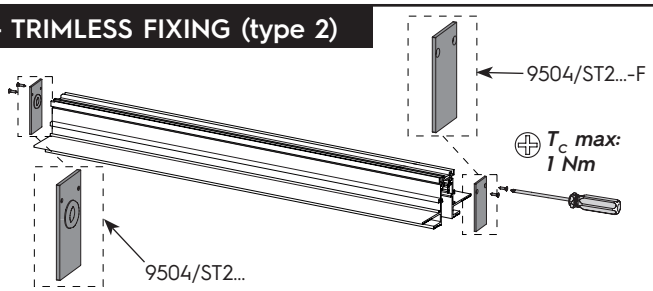

1

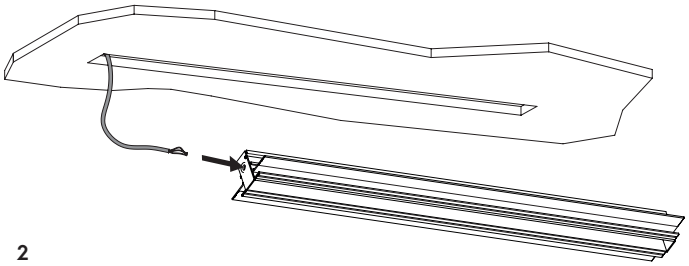

2

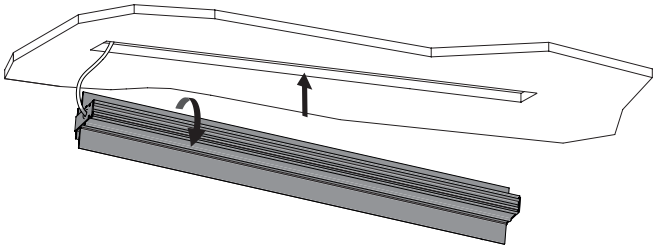

3

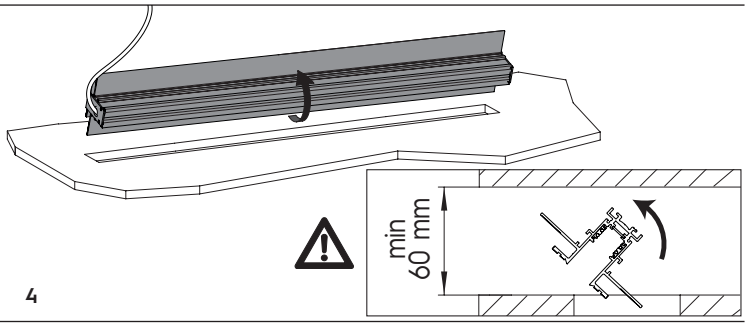

4

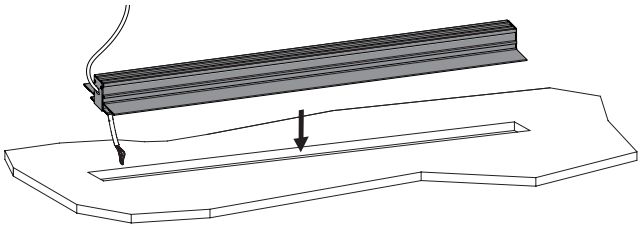

5

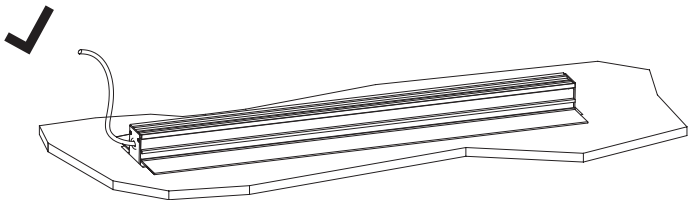

6

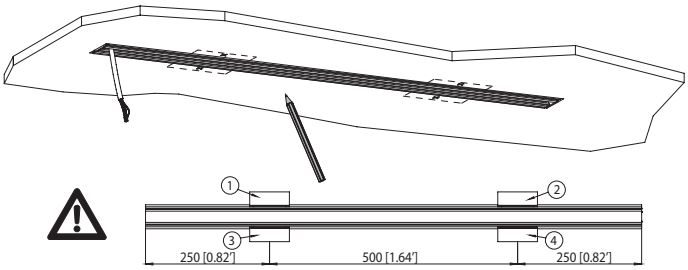

7

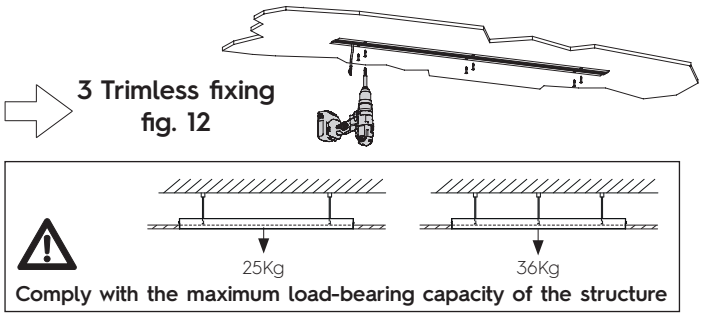

8

5 - IN ROW USE -TRIMLESS FIXING

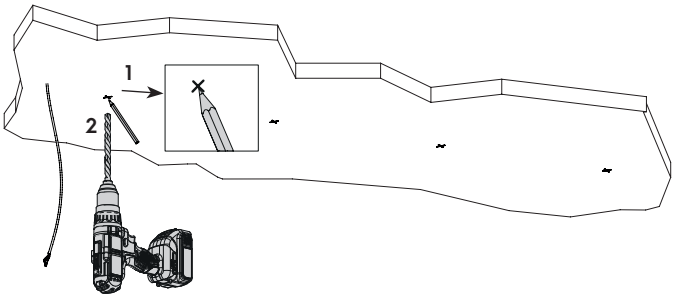

1

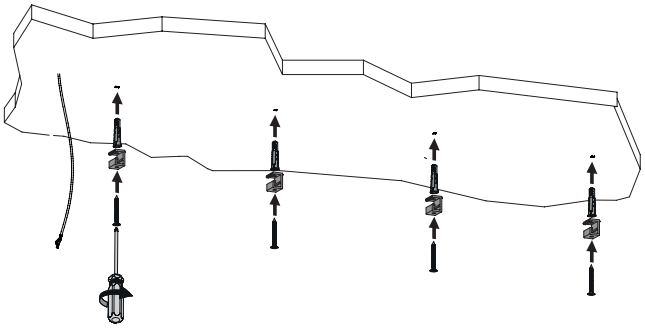

2

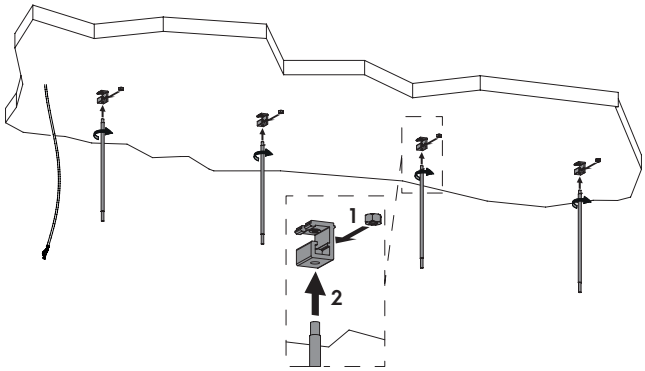
1
2

3

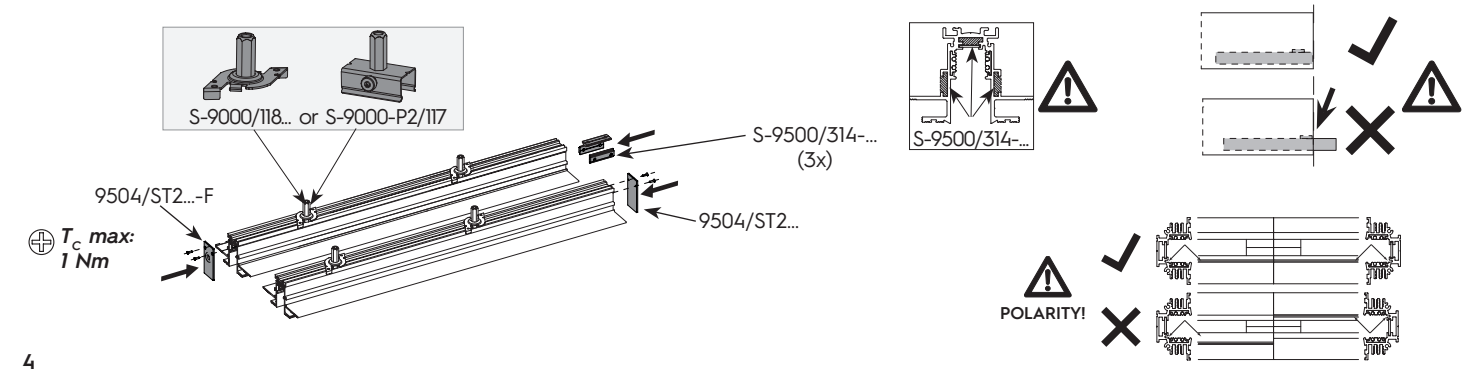
S-9000/118... or S-9000-P2/117
S-9500/314-...
(3x)
9504/ST2...-F
9504/ST2...
T_c max:
1 Nm
S-9500/314-...
POLARITY!

4

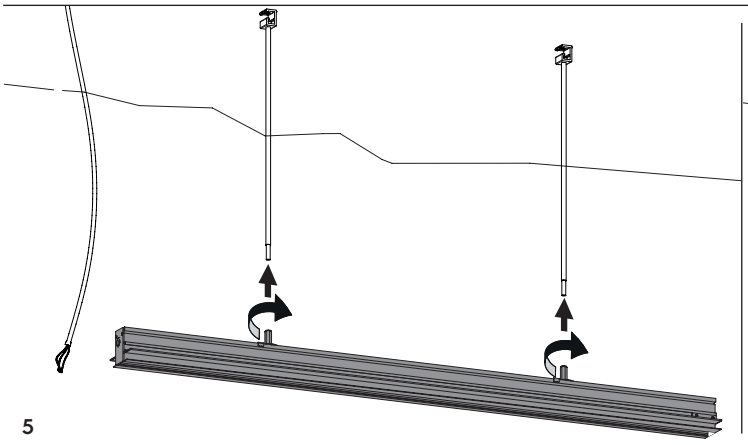

5

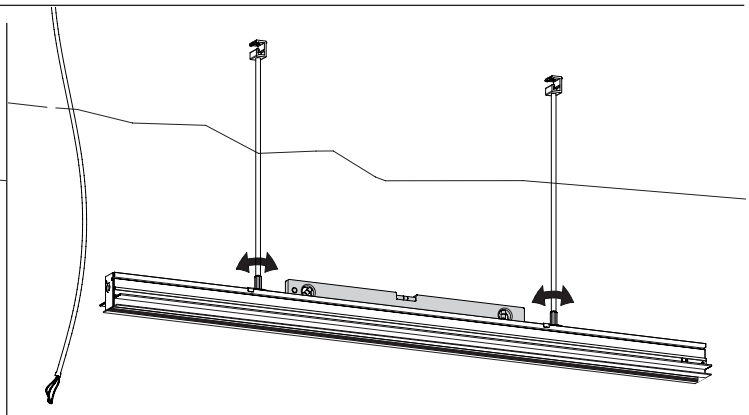

6

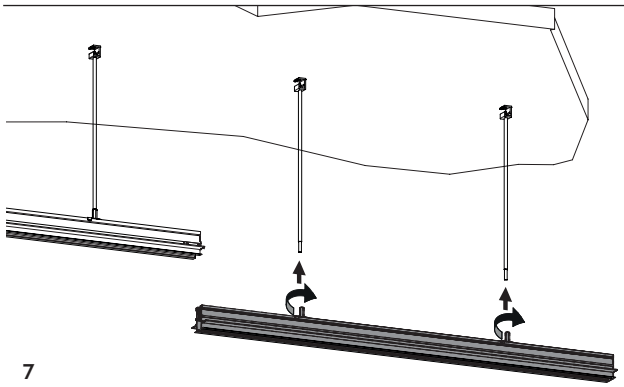

7

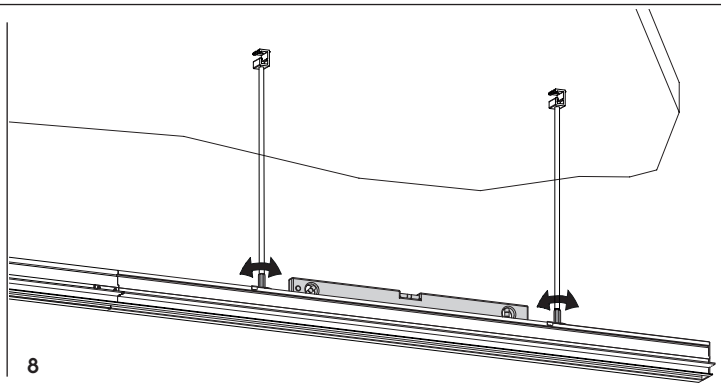

8

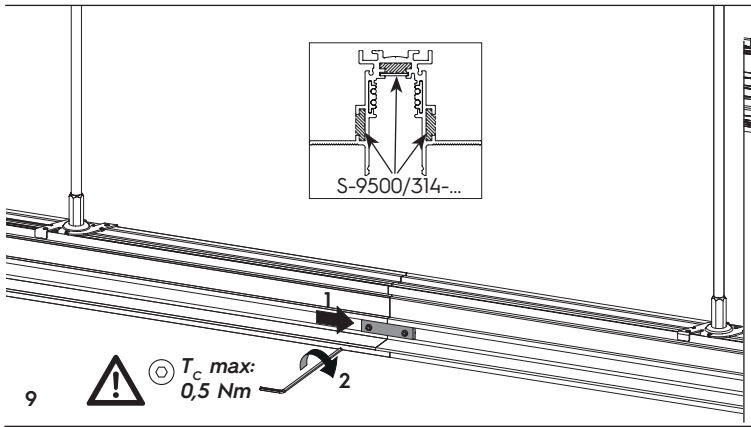
S-9500/314-...
1
2
T_c max:
0,5 Nm

9

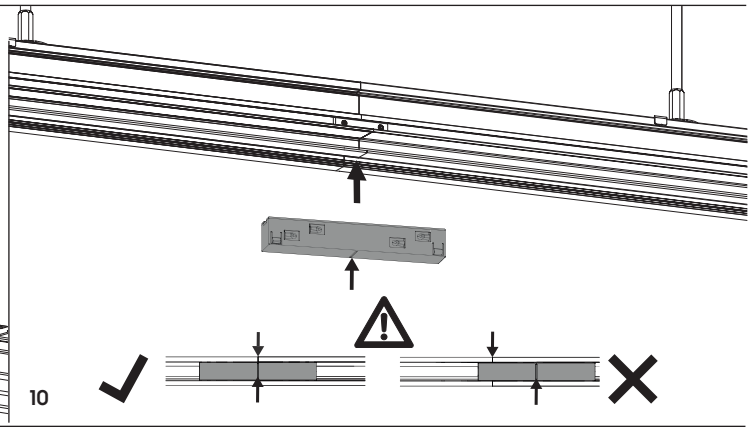

10

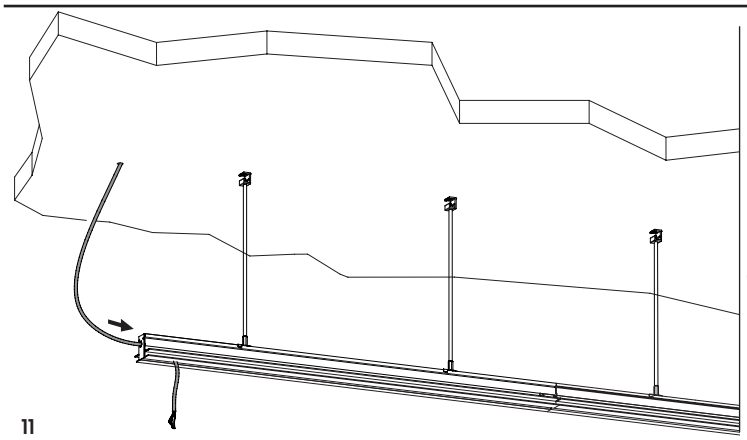

11

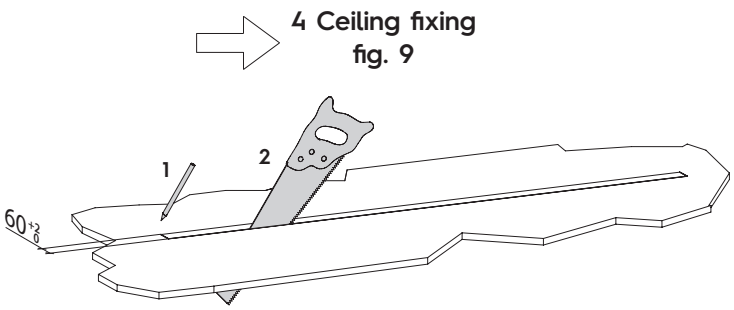

12

6 - IN ROW USE

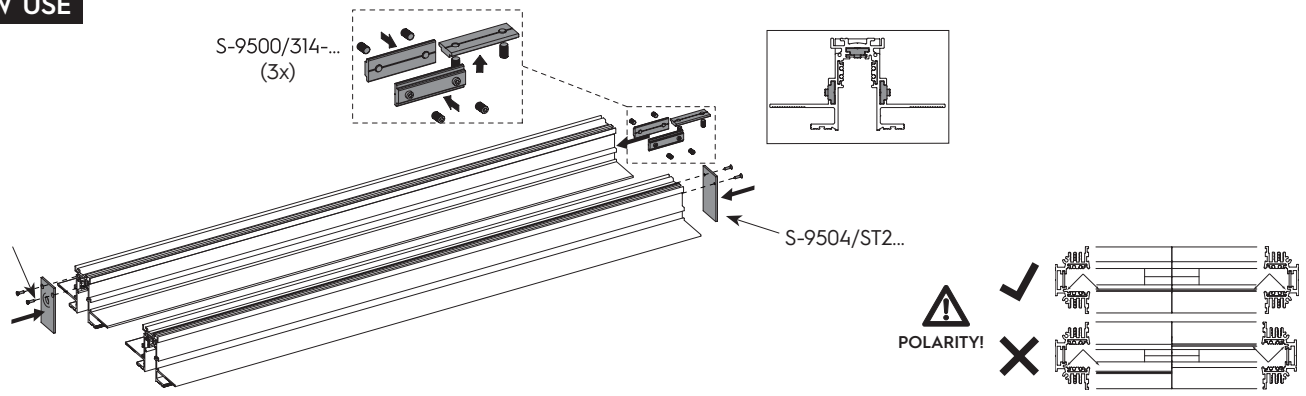

1

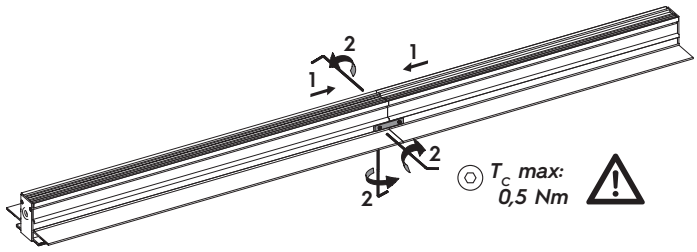

2

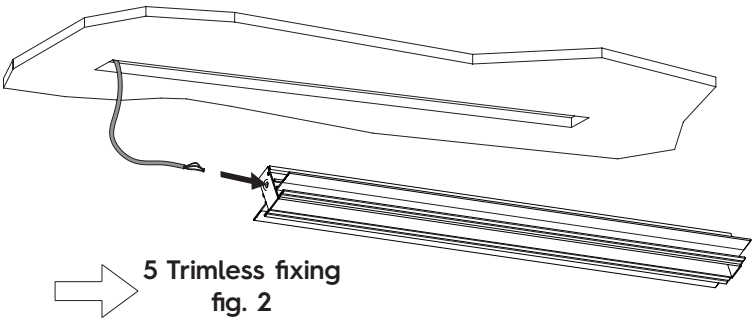

3

7 - CUTTING

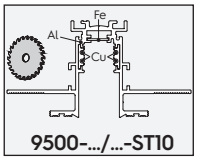

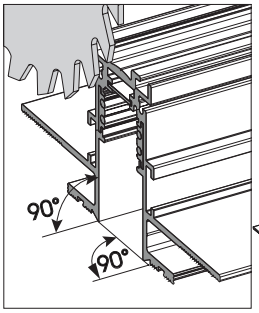

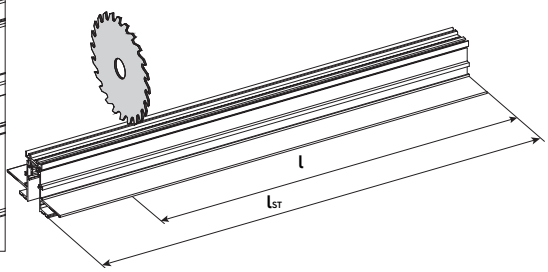

1

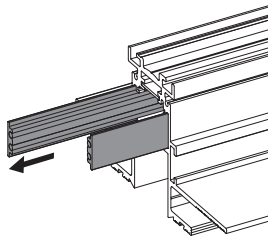

2

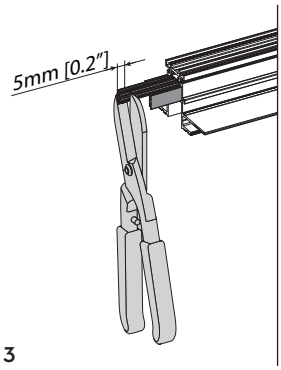

3

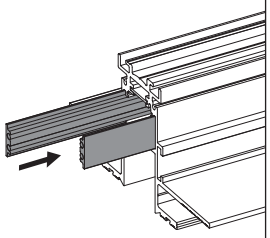

4

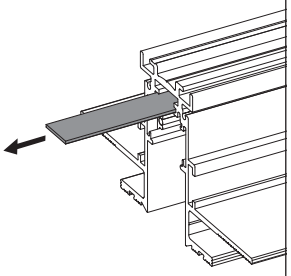

5

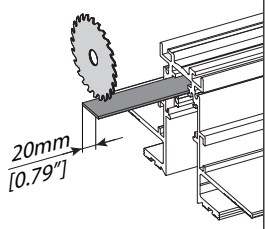

6

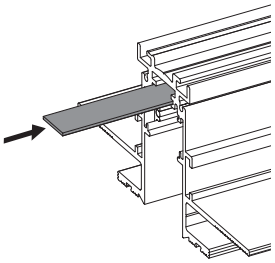

7

8 - S-9511/...-ST10

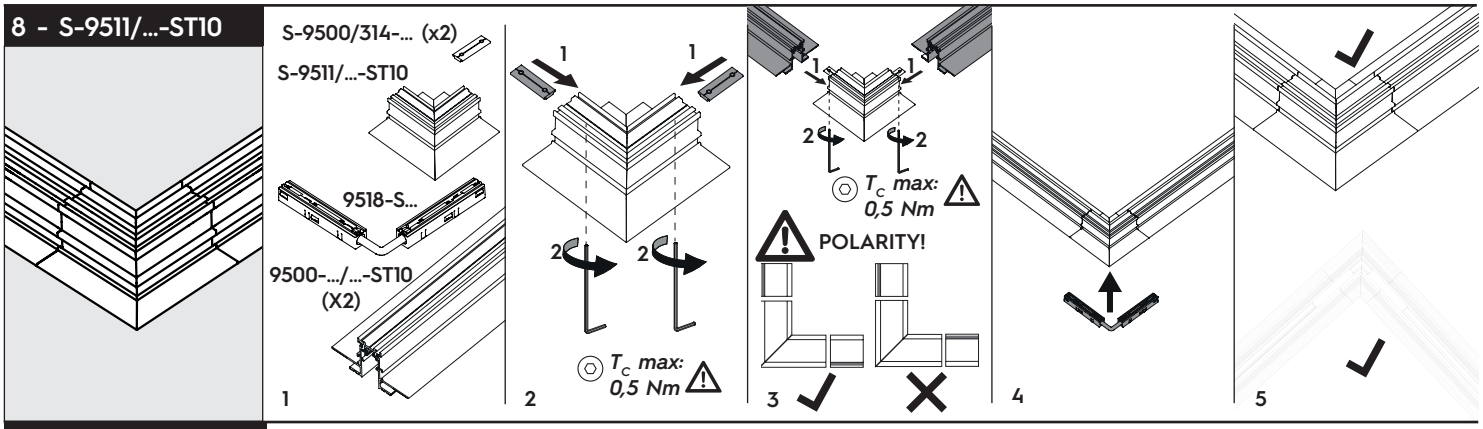

9 - S-9511-E/...-ST10

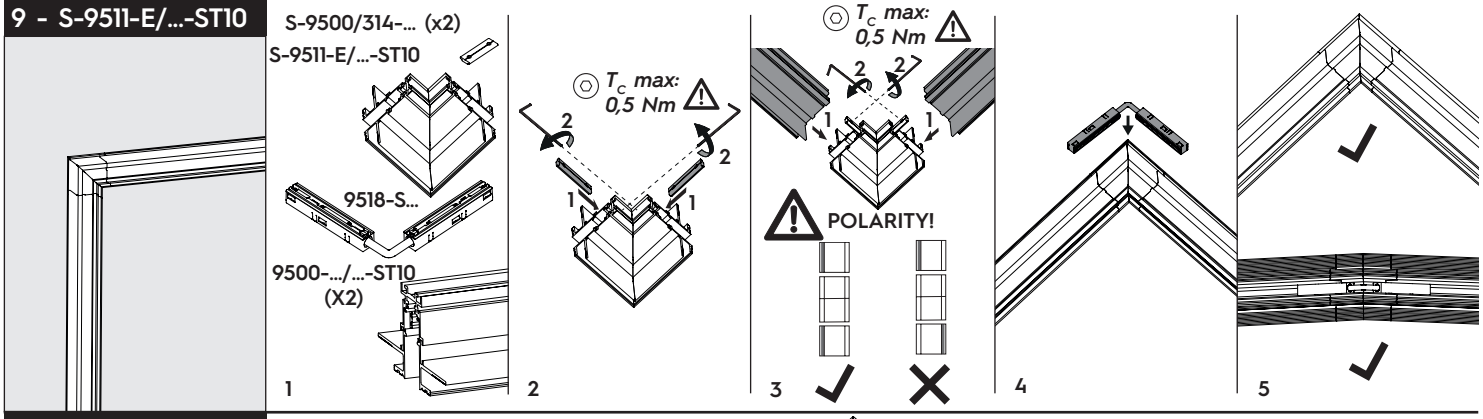

10 - S-9511-I/...-ST10

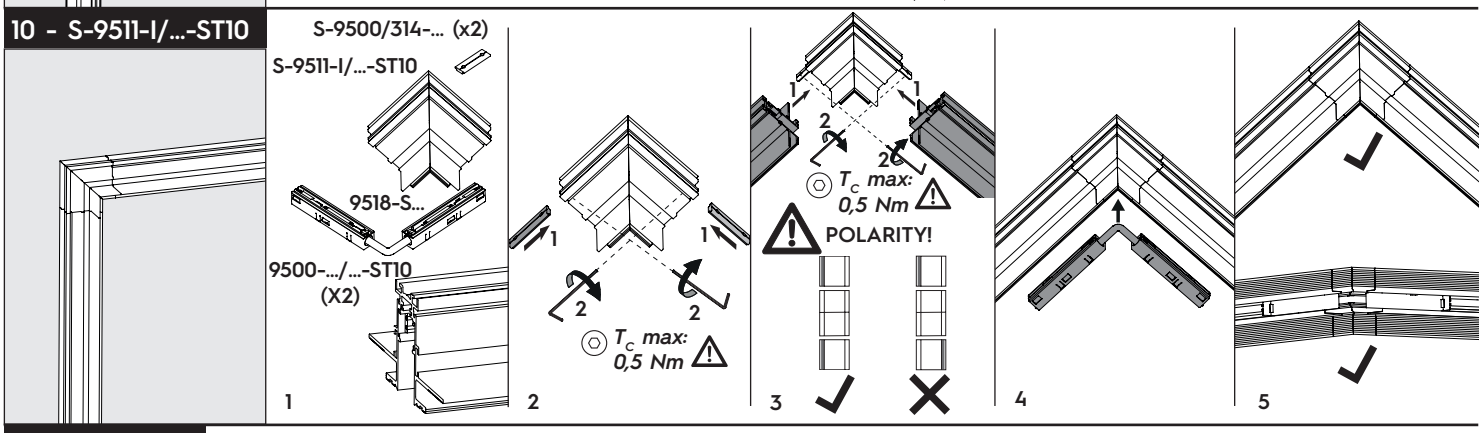

11 - 9501-S/...-E

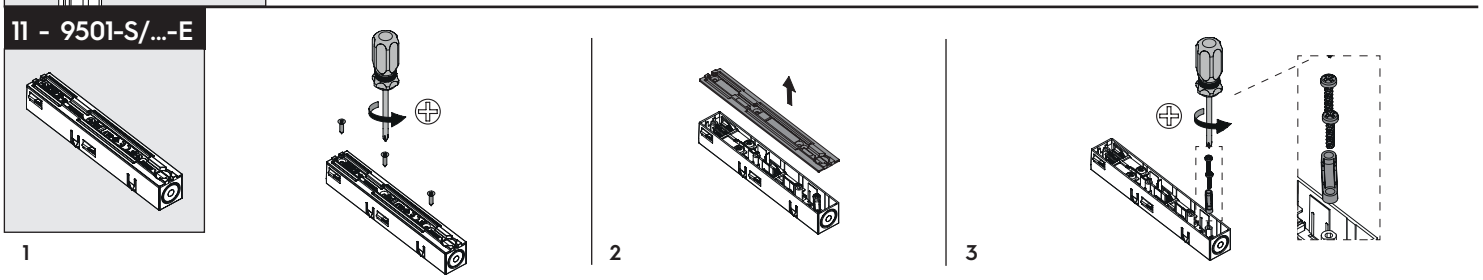

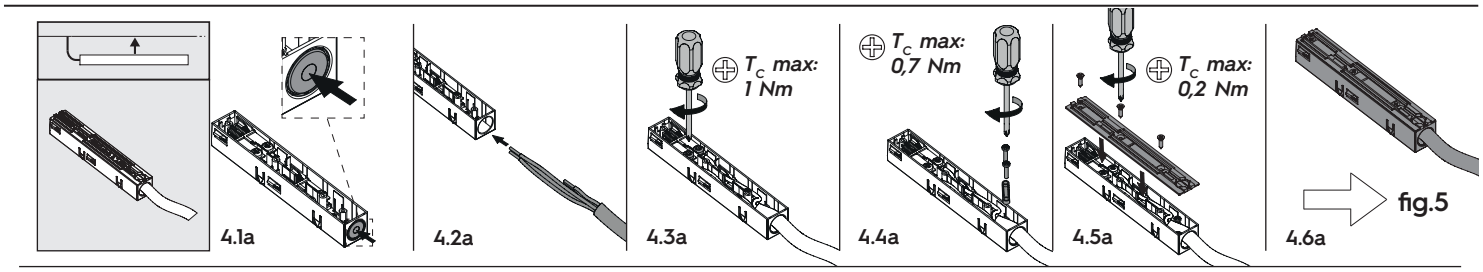

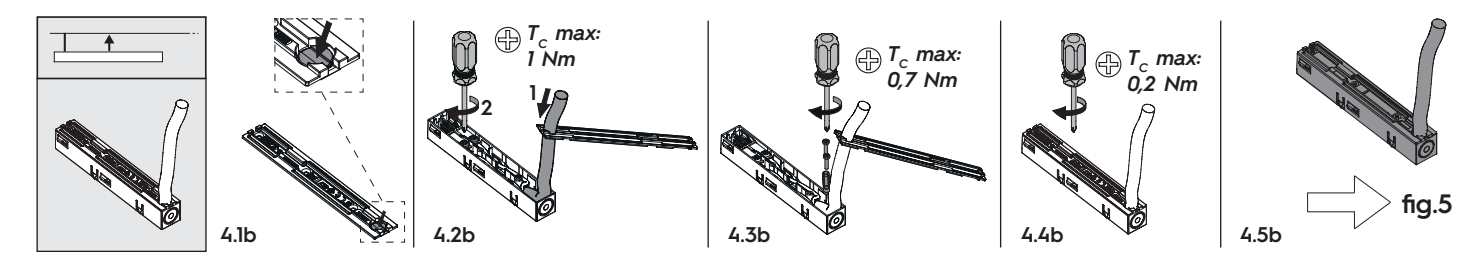

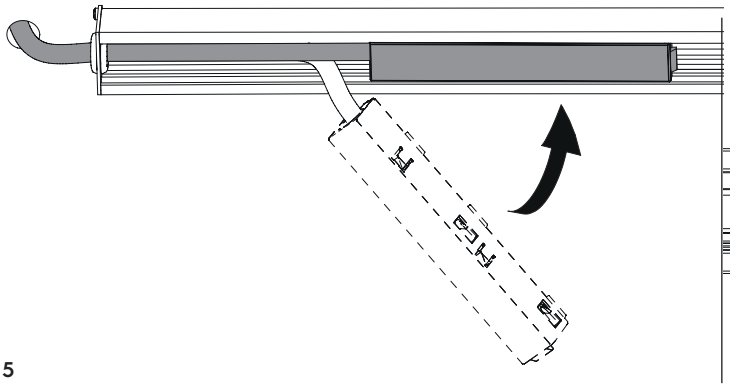

5

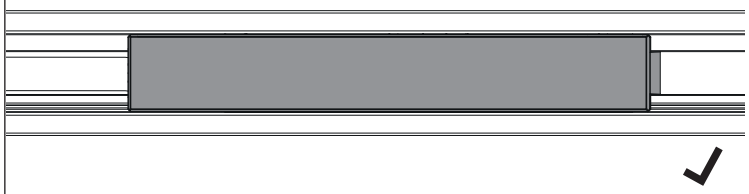

6

12 - 90° ANGLE

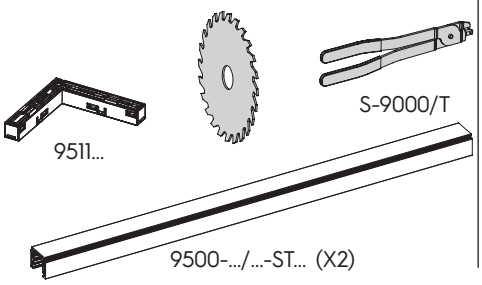

1

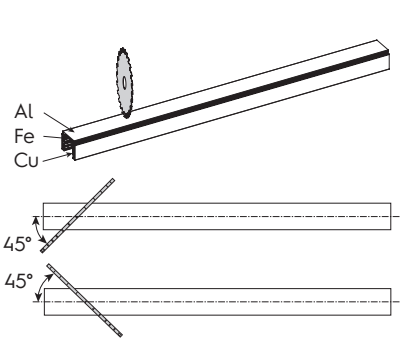

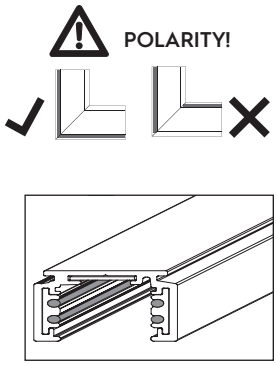

2

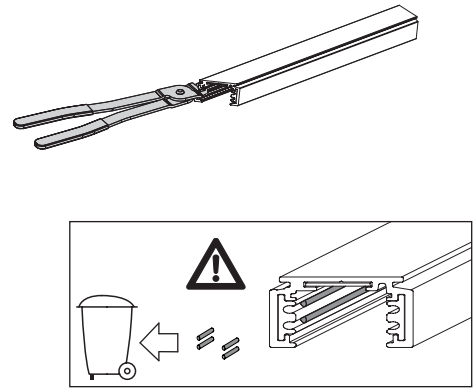

3

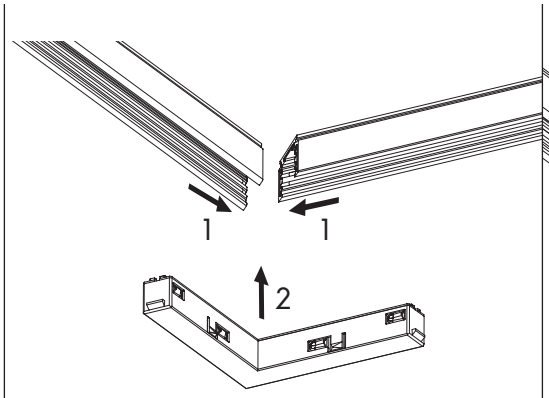

4

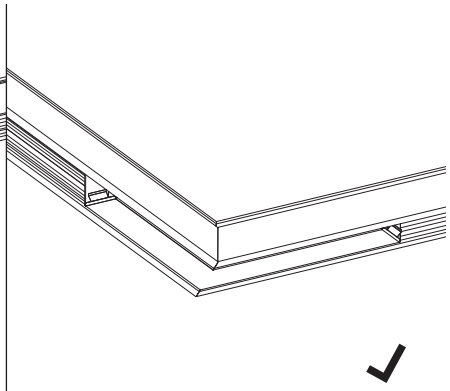

5

13 -/= 90° ANGLE

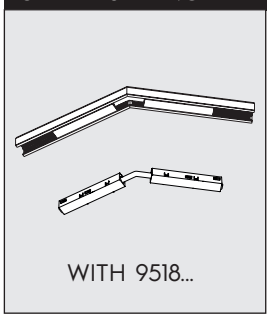

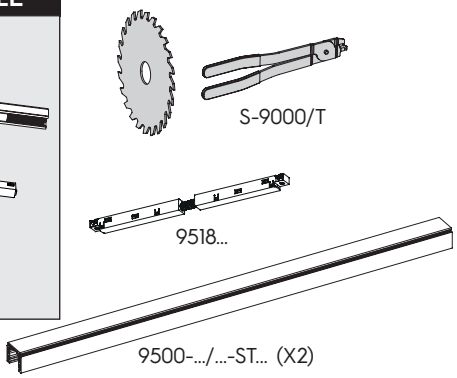

1

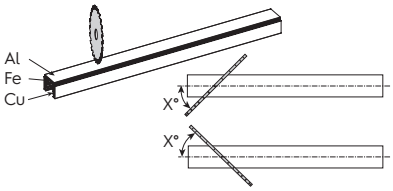

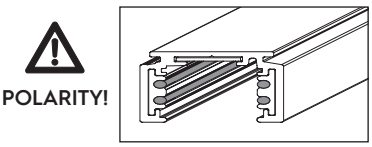

2

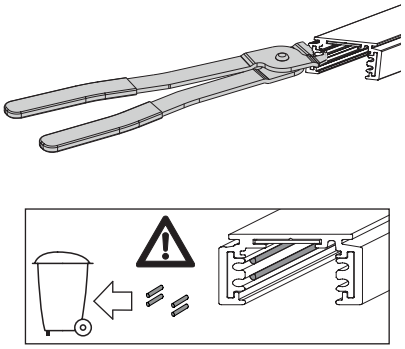

3

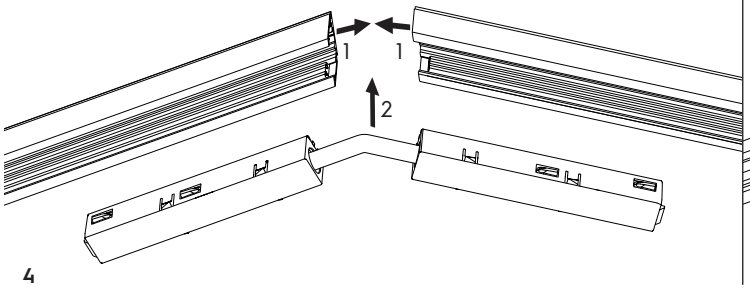

4

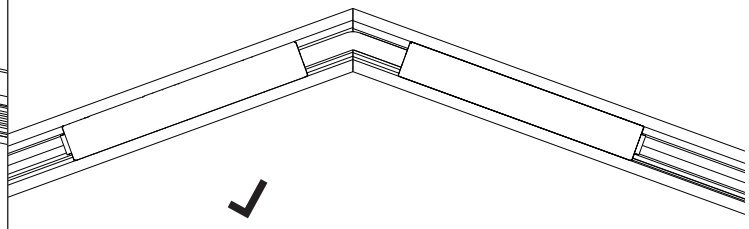

5

14 - WALL CEILING 90° ANGLE

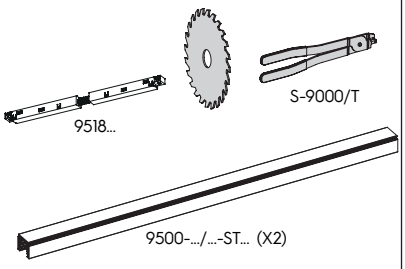

1

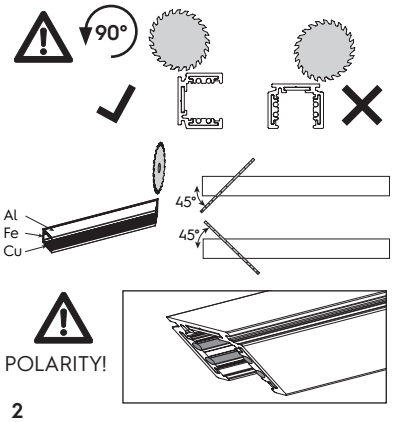

2

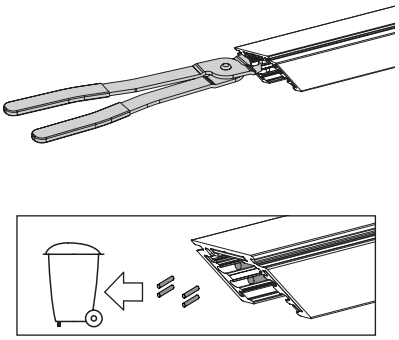

3

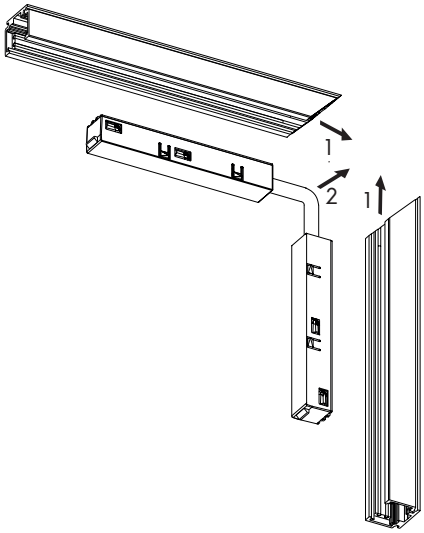

4

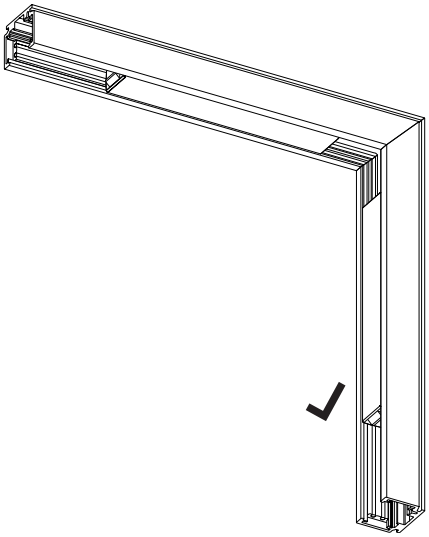

5